1.3 Specifications

1.3.1 Screw specifications

1.3.1.1 Mechatronic type E

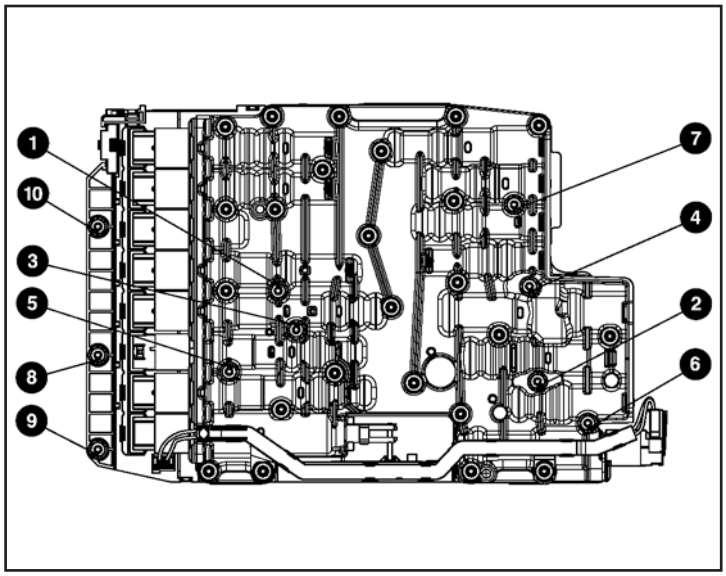

1.3.1.2 Mechatronic type M

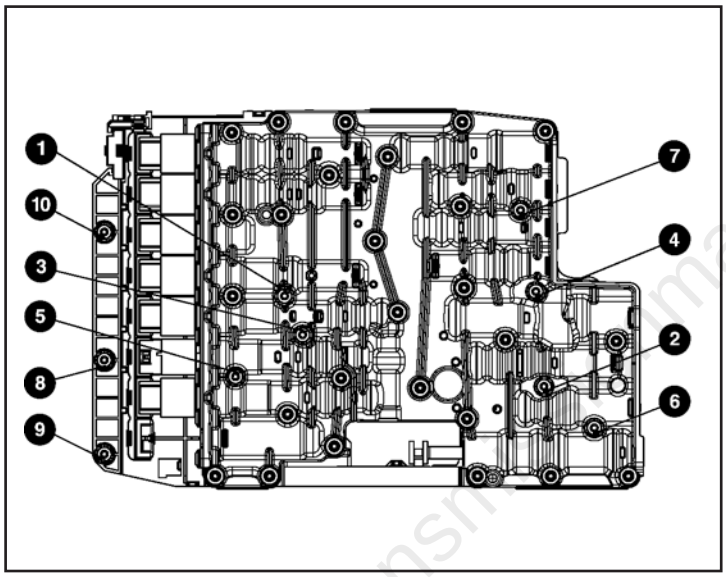

Transmission-manuals.com

Transmissionmanuals.com